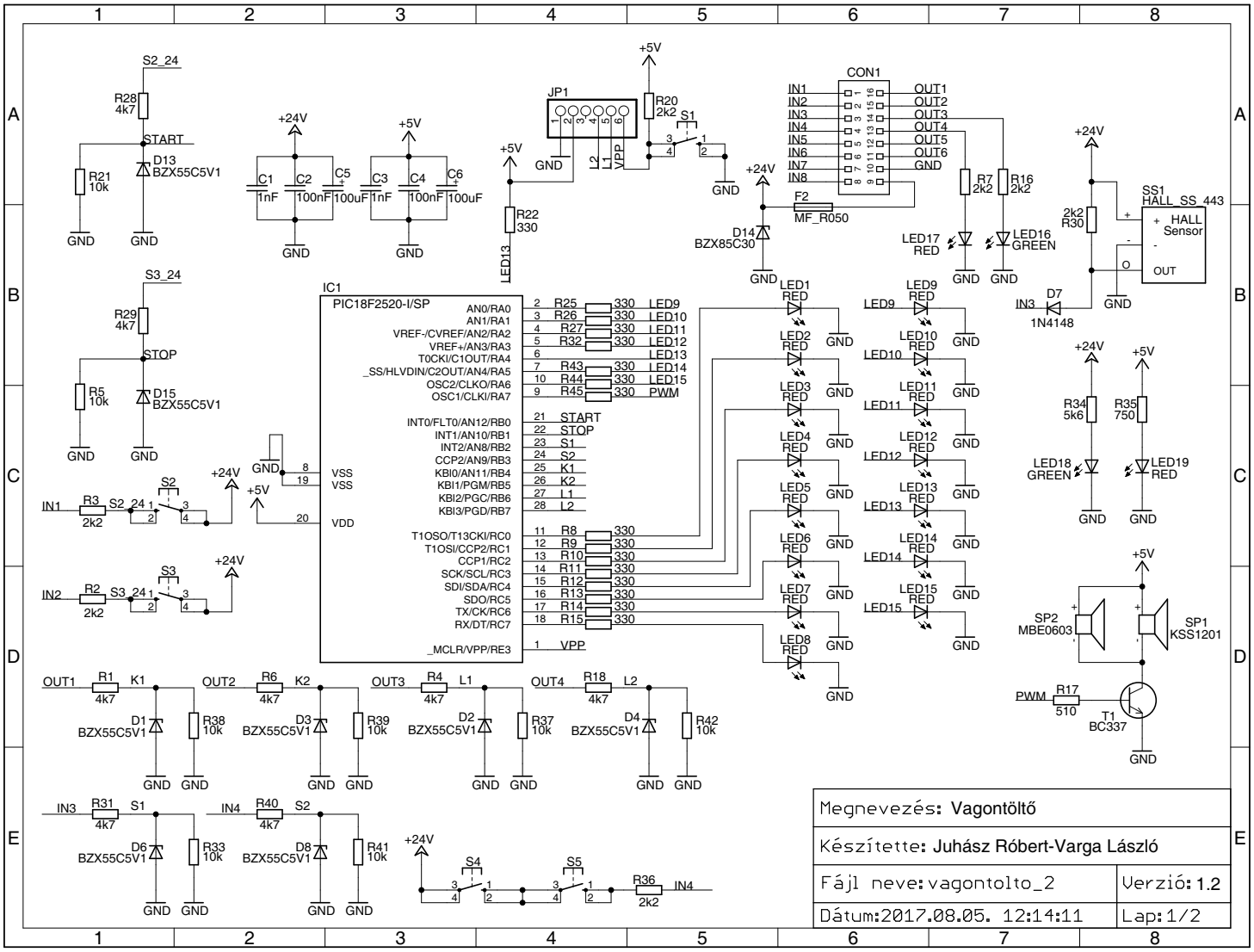
S2_24
R28 4k7
START
D13 BZX55C5V1
R21 10k
GND
+24V
C1 1nF
C2 100nF
C5 100uF
+5V
C3 1nF
C4 100nF
C6 100uF
JP1
R20 2k2
S1
R22 330
LED13
F2 MF_R050
D14 BZX85C30
CON1
IN1
IN2
IN3
IN4
IN5
IN6
IN7
IN8
OUT1
OUT2
OUT3
OUT4
OUT5
OUT6
R7 2k2
R16 2k2
LED17 RED
LED16 GREEN
SS1 HALL_SS_443
HALL Sensor
OUT
2k2 R30
D7 1N4148
S3_24
R29 4k7
STOP
R5 10k
D15 BZX55C5V1
IC1
PIC18F2520-I/SP
AN0/RA0
AN1/RA1
VREF-/CVREF/AN2/RA2
VREF+/AN3/RA3
T0CKI/C1OUT/RA4
_SS/HLVDIN/C2OUT/AN4/RA5
OSC2/CLKO/RA6
OSC1/CLKI/RA7
INT0/FLT0/AN12/RB0
INT1/AN10/RB1
INT2/AN8/RB2
CCP2/AN9/RB3
KBI0/AN11/RB4
KBI1/PGM/RB5
KBI2/PGC/RB6
KBI3/PGD/RB7
T1OSO/T13CKI/RC0
T1OSI/CCP2/RC1
CCP1/RC2
SCK/SCL/RC3
SDI/SDA/RC4
SDO/RC5
TX/CK/RC6
RX/DT/RC7
_MCLR/VPP/RE3
VSS
VDD
START
STOP
S1
S2
K1
K2
L1
L2
VPP
PWM
R25
R26
R27
R32
R43
R44
R45
R8
R9
R10
R11
R12
R13
R14
R15
330
LED9
LED10
LED11
LED12
LED13
LED14
LED15
LED1 RED
LED2 RED
LED3 RED
LED4 RED
LED5 RED
LED6 RED
LED7 RED
LED8 RED
LED9 RED
LED10 RED
LED11 RED
LED12 RED
LED13 RED
LED14 RED
LED15 RED
R34 5k6
R35 750
LED18 GREEN
LED19 RED
SP2 MBE0603
SP1 KSS1201
R17 510
T1 BC337
IN1
R3 2k2
IN2
R2 2k2
OUT1
R1 4k7
OUT2
R6 4k7
OUT3
R4 4k7
OUT4
R18 4k7
D1 BZX55C5V1
R38 10k
D3 BZX55C5V1
R39 10k
D2 BZX55C5V1
R37 10k
D4 BZX55C5V1
R42 10k
IN3
R31 4k7
IN4
R40 4k7
D6 BZX55C5V1
R33 10k
D8 BZX55C5V1
R41 10k
S4
S5
R36 2k2
Megnevezés: Vagontöltő
Készítette: Juhász Róbert-Varga László
Fájl neve: vagontolto_2
Verzió: 1.2
Dátum: 2017.08.05. 12:14:11
Lap: 1/2